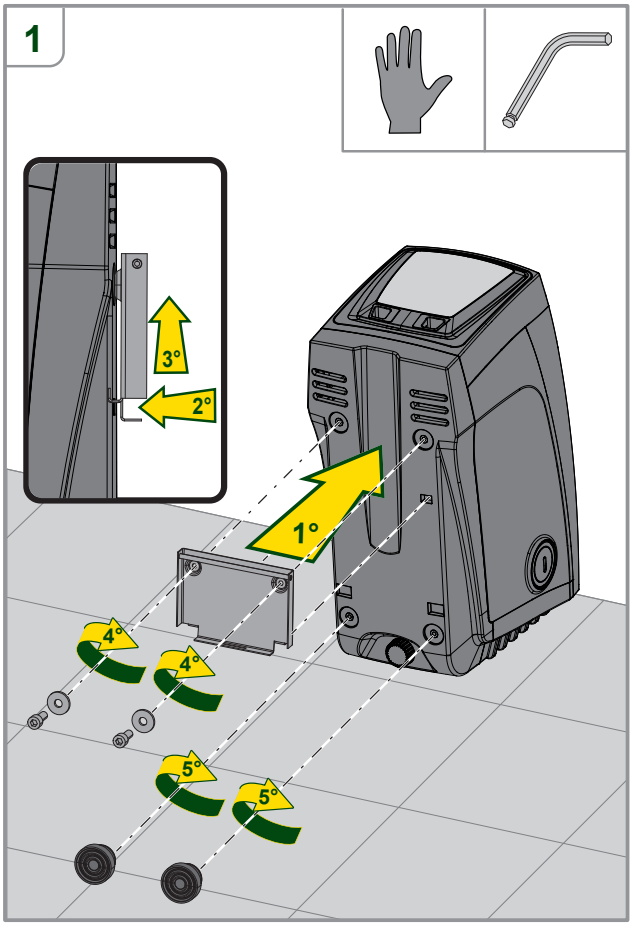

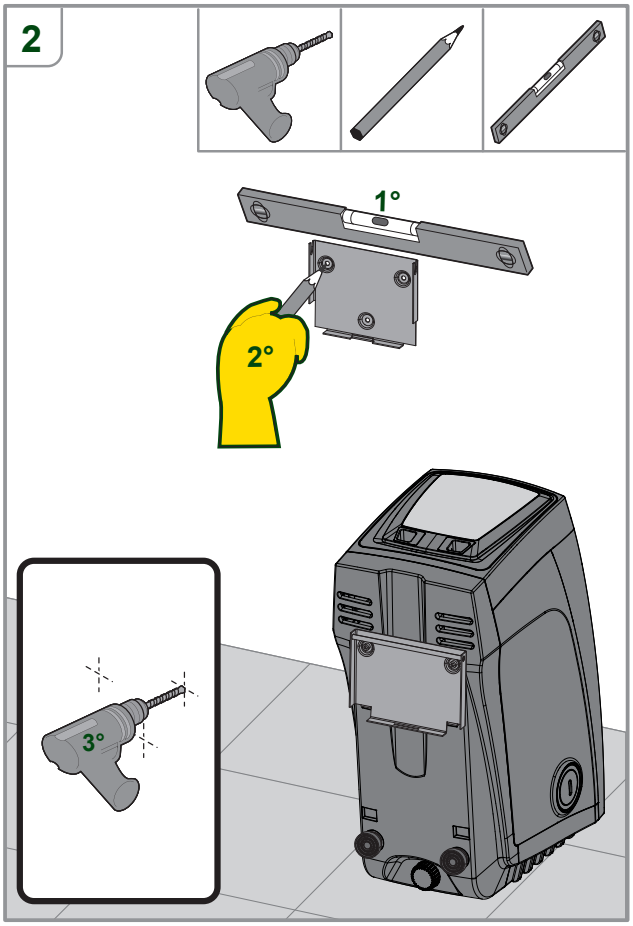

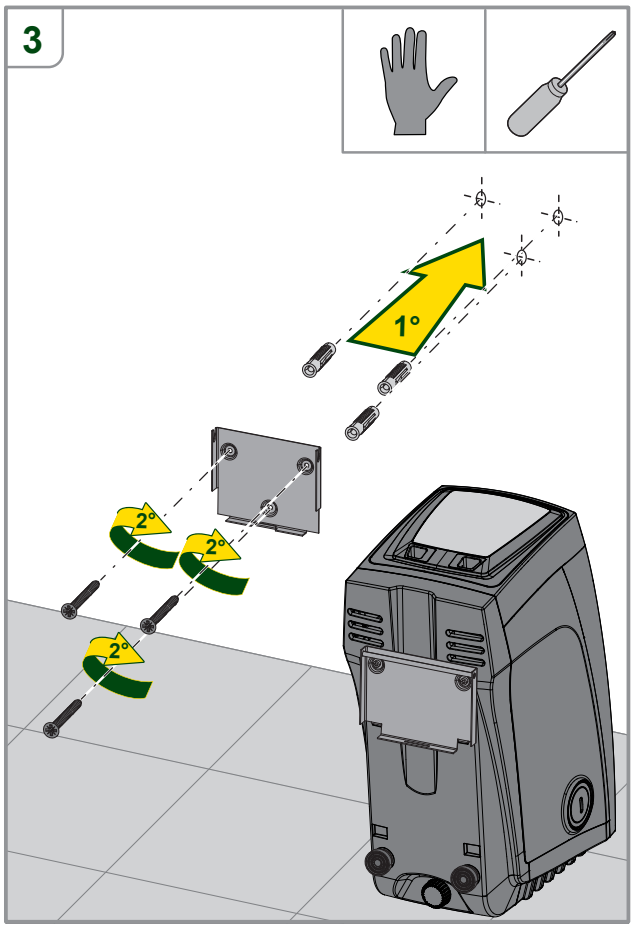

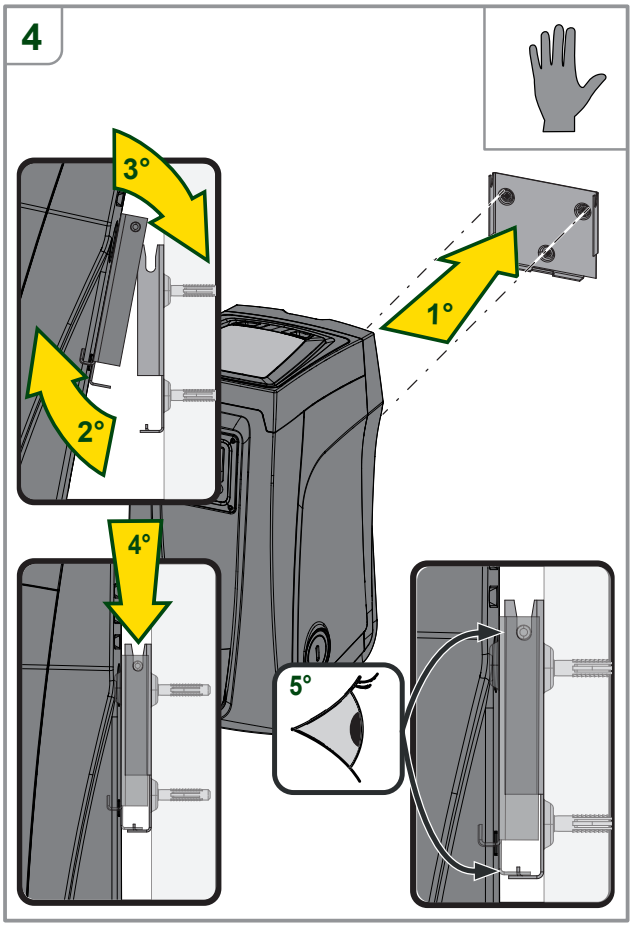

DAB WATER•TECHNOLOGY